Teleportation in a non-inertial frame

Paul M. Alsing* and David McMahon†
†*Center for High Performance Computing and*
†‡*Department of Physics and Astronomy*
University of New Mexico, Albuquerque, NM 87131

G. J. Milburn‡
School of Physical Science,
University of Queensland, Brisbane, Australia
(Dated: February 1, 2008)

In this work, we describe the process of teleportation between Alice in an inertial frame, and Rob who is in uniform acceleration with respect to Alice. The fidelity of the teleportation is reduced due to Davies-Unruh radiation in Rob's frame. In so far as teleportation is a measure of entanglement, our results suggest that quantum entanglement is degraded in non-inertial frames. We discuss this reduction in fidelity for both bosonic and fermionic resources.

PACS numbers: 03.65.Ud, 03.30.+p, 03.67.-a, 04.62.+v

arXiv:quant-ph/0311096v1 14 Nov 2003

I. INTRODUCTION

The large and rapidly growing field of quantum information science is a vindication of Landauer's insistence that we recognize the physical basis of information storage, processing and communication[1]. Quantum information science is based on the discovery that there are physical states of a quantum system which enable tasks that cannot be accomplished in a classical world. An important example of such a task is quantum teleportation[2]. Teleportation, like most recent ideas in quantum information science, is based squarely on the physical properties of non-relativistic quantum systems.

Recognizing that information science must be grounded in our understanding of the physical world, one is prompted to ask how relativistic considerations might impact tasks that rely on quantum entangled states. There has recently been some interest in this question for inertial frames. While Lorentz transformations cannot change the overall quantum entanglement of a bipartite state[3, 4], they can change which properties of the local systems are entangled. In particular, Gingrich and Adami[5] showed that under a Lorentz transformation the initial entanglement of just the spin degrees of freedom of two spin half particles can be transferred into an entanglement between both the spin and momentum degrees of freedom. Physically this means that detectors, which respond only to spin degrees of freedom, will see a reduction of entanglement when they are moving at large uniform velocity. Put simply, the nature of the entanglement resource depends on the inertial reference frame of the detectors. A similar result holds for photons[6].

In this paper however, we wish to consider quantum entanglement in non-inertial frames. In order to make the discussion physically relevant, we concentrate on a particular quantum information task; quantum teleportation. We will show that the fidelity of teleportation is compromised when the receiver is making observations in a uniformly accelerated frame. This is quite distinct from any reduction in fidelity through the Lorentz mixing of degrees of freedom noted by Gingrich and Adami[5]. Rather it is direct consequence of the existence of Davies-Unruh radiation for accelerated observers. In so far as teleportation fidelity is an operational measure of quantum entanglement, our results suggest that quantum entanglement may not be preserved in non-inertial frames. While the degree of decoherence is exceedingly small for practical accelerations, the apparent connection between space time geometry and quantum entanglement is intriguing.

The outline of this paper is as follows. In Section II we discuss the essential features of quantum field theory for an accelerated observer in flat spacetime. We concentrate our discussion on a massless scalar field, which will be used to model photons, ignoring polarization. In Section III, we recall the usual flat space teleportation protocol, and explore the degradation of the fidelity of the teleported state when one of the participants undergoes uniform acceleration [7]. We also discuss the reduction of fidelity in terms of entropy, and the lack of information gain experienced by the accelerated observer. In Section IV, we extend the previous bosonic results to the case of Dirac particles, and discuss the similarities and specific differences. We summarize and conclude our results in Section V. In an appendix, we discuss a somewhat analogous effect for the case of bosons in terms of the familiar process of optical parametric down conversion.

*Electronic address: alsing@hpcerc.unm.edu
†Electronic address: dmmcmah@sandia.gov
‡Electronic address: milburn@physics.uq.edu.au

II. UNIFORMLY ACCELERATED OBSERVERS

A. Preliminaries

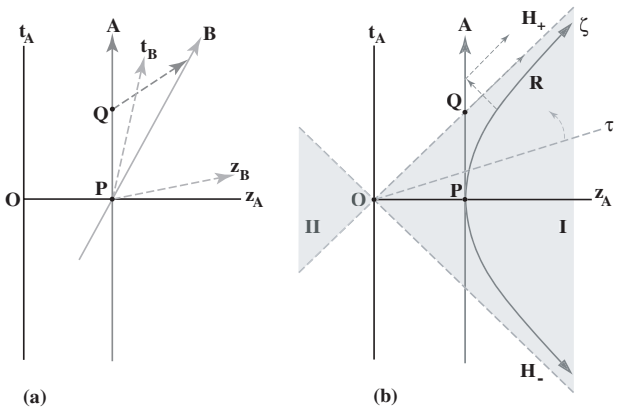

FIG. 1: (a) Minkowski diagram for the case of Alice (dark gray arrow) stationary and Bob (light gray arrow) travelling at constant velocity. Alice and Bob share an entangled Bell state at the event P (see text). Alice can complete the teleportation protocol by sending classical signals to Bob at a representative event Q. The entanglement fidelity of a bipartite state Ψ is unaltered if viewed from either Alice's or Bob's rest frame. (b) Alice (dark gray arrow) is again stationary, while Rob (dark gray hyperbola) undergoes constant acceleration. Alice and Rob share a bipartite entangled Bell state at the common point P. The light-like lines $\mathcal{H}_-$ and $\mathcal{H}_+$ form past and future particle horizon corresponding to Rob's proper times $\tau = -\infty$ and $\tau = +\infty$, respectively. At the event Q Alice crosses $\mathcal{H}_+$ (in her finite proper time t_A), and can no longer communicate with Rob. Rob, however, can still send signals to Alice across $\mathcal{H}_+$.

Let Alice be an inertial Minkowski observer with zero velocity, located at the point P as shown in Fig.(1a). Another inertial observer Bob is travelling with positive constant velocity $v < c$ in the z direction with respect to Alice, and their positions are coincident at the point P whereupon they each share one part of an entangled Bell state. The textbook teleportation protocol [8] proceeds as usual with Alice sending the results of her measurement to Bob at the point Q, say by photons, so that Bob will eventually receive them, and be able to rotate his half of the shared entangled state into the state $|\psi\rangle_M = \alpha|0\rangle_M + \beta|1\rangle_M$ that Alice wishes to teleport (where the M subscripts denotes a Minkowski state).

The situation is drastically different for the observer Rob who travels with constant acceleration a in the z direction with respect to Alice. Alice's and Rob's position coincide at the point P where again they instantaneously share an entangled Bell state, of which Rob takes one qubit on his journey. In Minkowski coordinates Rob's world line takes the form

$$t_R(\tau) = a^{-1}\sinh a\tau, \qquad z_R(\tau) = a^{-1}\cosh a\tau, \tag{1}$$

where τ is the proper time along the world line. Rob's trajectory is a hyperbola in Minkowski space bounded by the light-like asymptotes $\mathcal{H}_-$ and $\mathcal{H}_+$ which represents Rob's past and future horizons with $\tau = -\infty$ and $\tau = \infty$, respectively. The shaded region in the right half of the Minkowski plane in Fig.(1b) where Rob is constrained to move is called the *Right Rindler Wedge* (RRW) and is labelled with the roman numeral I. In general, a point in the RRW can be labelled by the *Rindler coordinates* (η, ζ) which are related to Minkowski coordinates (t, z) by

$$t = \zeta\sinh\eta, \qquad z = \zeta\cosh\eta, \tag{2}$$

where $-\infty < \eta < \infty$ and $0 < \zeta < \infty$. Lines of constant ζ are hyperbolas within the RRW and lines of constant η are straight lines through the origin. The past horizon $\mathcal{H}_-$ corresponds to $\zeta = 0, \eta = -\infty$ while the future horizon $\mathcal{H}_+$ corresponds to $\zeta = 0, \tau = \infty$, both light-like.

With the same coordinate transformation given in Eq.(2), the region $-\infty < \zeta < 0$ and $-\infty < \eta < \infty$ is called the *Left Rindler Wedge* (LRW) and is labeled by the roman numeral II. In this region, the lines of constant η run in the opposite sense than in I. Region I is causally disconnected from II and no signal from one region can propagate into the other region. The metric for Minkowski space is given by

$$ds^2 = d\vec{x}_\perp^2 + dz^2 - dt^2 = d\vec{x}_\perp^2 + d\zeta^2 - \zeta^2 d\eta^2 \tag{3}$$

where $\vec{x}_\perp \equiv (x, y)$.

It is well appreciated now [9, 10, 11, 12, 13, 14] that the quantization of fields in Minkowski and Rindler coordinates are inequivalent, implying that the RRW vacuum seen by Rob $|0\rangle_I$ is different than the Minkowski vacuum seen by Alice $|0\rangle_M$. The celebrated result of Davies and Unruh [10] is that the Minkowski vacuum can be written in terms of the region I and II states (for a scalar field) as

$$|0\rangle_M = \prod_{\Omega,\vec{k}_\perp} \left(1 - e^{-2\pi\Omega}\right)^{-1/2} \sum_{n=0}^{\infty} e^{-\pi\Omega n} |n_{\Omega,\vec{k}_\perp}\rangle_I \otimes |n_{\Omega,-\vec{k}_\perp}\rangle_{II}, \tag{4}$$

where $\Omega \equiv \omega_R/(a/c)$ with ω_R the frequency of a Rindler particle. The Minkowski vacuum as given by Eq.(4) is a two-mode squeezed state [15] (see appendix A) which for each mode $(\Omega, \vec{k}_\perp)$ has the general form

$$|0\rangle_M \sim \frac{1}{\cosh r} \sum_{n=0}^{\infty} \tanh^n r\, |n\rangle_I \otimes |n\rangle_{II}, \tag{5}$$

with

$$\cosh r = \left(1 - e^{-2\pi\Omega}\right)^{-1/2}, \ \sinh r = e^{-\pi\Omega}\left(1 - e^{-2\pi\Omega}\right)^{-1/2}. \tag{6}$$

Note that $|0\rangle_M$ can be written as $S(r)|0\rangle_R \equiv S(r)\,|0\rangle_I \otimes |0\rangle_{II}$ where the two-mode squeezing operator is given by $S(r) \equiv \exp[r\,(b_I^\dagger b_{II}^\dagger - b_I b_{II})]$ [15]. The evolution of a Minkowski state vector is effected by the unitary operator $e^{-iH_M t}$ where for a single mode (notationally ignoring transverse momentum degrees of freedom) $H_M = \hbar\omega_M a_M^\dagger a_M$. For Rindler states the evolution proceeds via $e^{-iH_R\tau}$ where

$$H_R \equiv H_I - H_{II} \tag{7}$$

$$H_I = \hbar\omega_R b_I^\dagger b_I, \qquad H_{II} = \hbar\omega_R b_{II}^\dagger b_{II}. \tag{8}$$

The minus sign in Eq.(8) stems from the sense of time essentially flowing "backwards" in region II (i.e. for $a < 0$, $\eta(\tau) = a\,\tau$ is a decreasing function of τ).

Rob, who lives in region I and is causally disconnected from the LRW, constructs all his observables solely in terms of b_I and $b_I^\dagger$ operators, which then act upon $|0\rangle_R$. Therefore, all physical states in the RRW described by Rob are of the form $|\psi\rangle_I \otimes |0\rangle_{II}$. It is in this sense that we can speak of $|0\rangle_I$ as the "vacuum seen by Rob."

Since he is causally disconnected from region II, Rob must reduce any Minkowski density matrix describing both Rindler wedges to one appropriate to region I only, by tracing out over region II. For a general Minkowski state $\rho^{(M)}$, the state $\rho^{(I)}$ perceived by Rob in the RRW is given by

$$\rho^{(I)} = Tr_{II}\big(\rho^{(M)}\big). \tag{9}$$

In particular, Rob perceives the Minkowksi vacuum as a thermal state,

$$\rho^{(I)}_{|0\rangle_M} \equiv Tr_{II}(|0\rangle_M\langle 0|) = \big(1 - e^{-2\pi\Omega}\big)\sum_{n=0}^{\infty} e^{-2\pi\Omega n}|n\rangle_I\langle n|. \tag{10}$$

The exponential terms can be written as $\exp(-\hbar\omega_R/k_B T_U)$ with the *Unruh temperature* T_U is given by (in units of $k_B = 1$)

$$T_U \equiv \frac{\hbar a}{2\pi c} = \frac{\hbar}{2\pi c\,\zeta_0}, \tag{11}$$

where $\zeta(\tau) = \zeta_0 = 1/a$ is the constant Rindler position coordinate of Rob's stationary world line.

B. Relationship between Minkowski and Rindler modes

In this section we will use two-photon states of the electromagnetic field which, for simplicity and without loss of generality, are modelled by the massless modes of a scalar field (we ignore polarization). For the Bell state used as the entangled resource, we must consider Fock states other than the vacuum state for the Rindler observer. This is easily done by a consideration of how the creation and anihilation operators transform. The relationship between the Minkowski and Rindler modes is given by the Bogoliubov transformation

$$b^{(\sigma)}_{\Omega,\vec{k}_\perp} = \int d^3k' \left(\alpha^{(\sigma)}_{kk'} a_{k'} + \beta^{(\sigma)}_{kk'} a^\dagger_{k'}\right) \tag{12}$$

where the notation of [12] has been adopted, namely $\sigma = (+,-)$ refers to region I and II respectively, $k = (\Omega, \vec{k}_\perp)$ and $k' = (\vec{k}_\perp, k^3)$. Modes in Minkowski space are specified by the wave vector $\vec{k} \equiv (\vec{k}_\perp, k^3)$ where $\vec{k}_\perp = (k^1, k^2)$ are the components of the momentum perpendicular to the direction of Rob's acceleration. The Minkowski frequency, for a general particle of mass m, is given by $\omega_{\vec{k}} = \sqrt{m^2 + \vec{k}^2}$. These modes arise from the solution of the scalar wave equation in the standard metric (first equality in Eq.(3)). Modes in Rindler space arise from the solution of the wave equation in the Rindler metric, the second equality in Eq.(3). They are specified by a positive energy Rindler frequency Ω and $\vec{k}_\perp$. Solution of the wave equation in region I yields modes that have finite support in the RRW, and zero outside. Similarly for region II. The separate Rindler quantizations in the RRW and LRW yield a complete othronormal set of modes that are appropriate for their respective regions and independent of the opposite region. The Bogoliubov transformation relating Minkowski to Rindler modes can be put into a more transparent form by introducing a third set of modes, the *Unruh modes* $d^{(\sigma)}_{\Omega,\vec{k}_\perp}$ and $d^{(\sigma)\dagger}_{\Omega,\vec{k}_\perp}$. The Unruh modes arise by considering the Fourier transform of the usual Minkowski plane waves $[(2\pi)^3\,2\omega_{\vec{k}}]^{-1/2}\exp(\vec{k}\cdot\vec{x} - \omega_{\vec{k}}t)$ in terms of the Rindler proper time τ [14]. These complete, orthonormal set of modes exits over all of Minkowski space and can be "patched together" to form two complete orthonormal set of modes that analytically continue the Rindler modes from their region of definition (I, II) to their opposite, causally disconnected region (II, I). The physical significance of the Unruh modes is that they diagonalize the generator of Lorentz boosts [12], which in Minkowski coordinates is given by

$$M^{\alpha\beta} = \int d^3x (x^\alpha T^{0\beta} - x^\beta T^{0\alpha}).$$

The restriction of the generator of boosts in the z direction to region I gives the Rindler Hamiltonian $H_R = M^{03}\big|_I$.

The relationship between the Unruh modes and the Minkowski modes is given by [12]

$$a_{\vec{k}_\perp,k^3} = \sum_\sigma \int_0^\infty d\Omega\, p^{(\sigma)*}_\Omega(k^3) d^{(\sigma)}_{\Omega,\vec{k}_\perp}. \tag{13}$$

which can be inverted to give

$$d^{(\sigma)}_{\Omega,\vec{k}_\perp} = \int_{-\infty}^\infty dk^3 p^{(\sigma)}_\Omega(k^3) a_{\vec{k}_\perp,k^3}. \tag{14}$$

In the above expression, the functions $p_\Omega^{(\sigma)}(k^3)$ form a complete orthonormal set and are given by

$$p_\Omega^{(\sigma)}(k^3) = \frac{e^{i\sigma\Omega y_{\vec{k}}}}{(2\pi\omega_{\vec{k}})^{1/2}} \quad y_{\vec{k}} \equiv \frac{1}{2}\ln\left(\frac{\omega_{\vec{k}}+k^3}{\omega_{\vec{k}}-k^3}\right) \tag{15}$$

which are just phase factors. Since by Eq.(14) the Unruh annihilation operator is a sum over only Minkowski annihilation operators, it too annihilates the Minkowski vacuum.

$$a_{\vec{k}_\perp,k^3}|0\rangle_M = 0, \qquad d^{(\sigma)}_{\Omega,\pm\vec{k}_\perp}|0\rangle_M = 0. \tag{16}$$

Finally, the Unruh modes are related in a natural way to the Rindler modes through the following Bogoliubov transformation

$$\begin{bmatrix} d^{(+)}_{\Omega,\vec{k}_\perp} \\ d^{(-)\dagger}_{\Omega,-\vec{k}_\perp} \end{bmatrix} = \begin{bmatrix} \cosh r & -\sinh r \\ -\sinh r & \cosh r \end{bmatrix} \begin{bmatrix} b^{(+)}_{\Omega,\vec{k}_\perp} \\ b^{(-)\dagger}_{\Omega,-\vec{k}_\perp} \end{bmatrix} \tag{17}$$

with the hyperbolic functions of r related to the Rindler frequency Ω by Eq.(6). The operators $b^{(+)}$ and $b^{(-)}$ annihilate the RRW vacuum $|0\rangle_+$ and LRW vacuum $|0\rangle_-$ respectively, and commute with each other.

By Eq.(13) we see that a given Minkowski mode of frequency $\omega_{\vec{k}}$ is spread over all positive Rindler frequencies Ω (peaked about $\Omega \sim \omega_{\vec{k}}$), as a result of the Fourier transform relationship between $a_{\vec{k}_\perp,k^3}$ and $d^{(\sigma)}_{\Omega,\vec{k}_\perp}$. We now simplify our analysis by considering the effect of teleportation of the state $|\psi\rangle_M = \alpha|0\rangle_M + \beta|1\rangle_M$ by the Minkowski observer Alice to a single Rindler mode of the RRW observer Rob. That is, we consider only the mode $(\Omega, \vec{k}_\perp)$ in region I which is distinct from the mode $(\Omega, -\vec{k}_\perp)$ in the same region. From Eq.(4) the vacuum breaks up into products of pairs of Fock states, each corresponding to a correlated region I-region II mode pair,

$$|0\rangle_M \sim \cdots \{|n_{\Omega,\vec{k}_\perp}\rangle_I |n_{\Omega,-\vec{k}_\perp}\rangle_{II}\}\{|n_{\Omega,-\vec{k}_\perp}\rangle_I |n_{\Omega,\vec{k}_\perp}\rangle_{II}\}\cdots \tag{18}$$

As such, we can consider only the $\sigma = (+)$ contribution in Eq.(13) (corresponding to the correlated mode pair in the first set of parentheses in Eq.(18)) and drop the unessential phase factors $p_\Omega^{(\sigma)}(k^3)$. The single Rindler mode component of the Minkowski vacuum state we are interested in is then

$$|0\rangle_M \to \frac{1}{\cosh r}\sum_{n=0}^{\infty} \tanh^n r |n_{\Omega,\vec{k}_\perp}\rangle_I \otimes |n_{\Omega,-\vec{k}_\perp}\rangle_{II}. \tag{19}$$

The relevant Bogoliubov transformation can now be written as

$$a^\dagger_{\vec{k}_\perp,k^3} \to d^{(+)\dagger}_{\Omega,\vec{k}_\perp} = \cosh r\, b^{(+)\dagger}_{\Omega,\vec{k}_\perp} - \sinh r\, b^{(-)}_{\Omega,-\vec{k}_\perp}. \tag{20}$$

From here on we drop all the frequency and momentum subscripts and replace the labels $\pm$ by I and II, keeping in mind the full definitions in Eq.(19) and Eq.(20).

III. TELEPORTATION FROM A MINKOWSKI OBSERVER TO A RINDLER OBSERVER

We now discuss how Alice and Rob can come to share an entangled resource for teleportation. Suppose that Alice and Rob each hold an optical cavity, at rest in their local frame. At event P their two frames coincide when Rob's frame is instantaneously at rest. At this event we suppose that the two cavities overlap and simultaneously a four photon source excites a two photon state in each cavity, as depicted in Fig.(2). We will also assume that, prior to event P, Alice and Rob ensure that all photons are removed from their cavities.

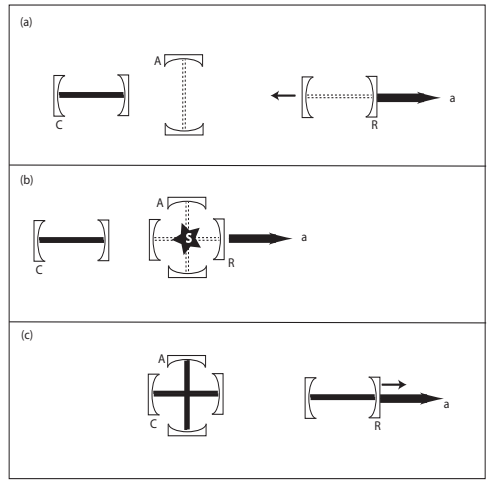

FIG. 2: Cavities A (Alice, Minkowski), R (Rob, Rindler), and C (client cavity, Minkowski). (a) For $\tau < 0$ Rob's cavity moves with constant acceleration a in the negative z-direction. (b) At $\tau = 0$ A and R overlap and a 4-photon entangled state is shared between the two cavities. (c) At some time $\tau > 0$ Alice makes a Bell measurement with the unknown state in C and her half of the Bell state in A. R moves with constant acceleration in positive z-direction.

Suppose that each cavity supports two orthogonal modes (spatial modes, we ignore polarization, and model the photons by the massless modes of a scalar field), with the same frequency, labelled $A_i,\ R_i$ with $i = 1, 2$, which are each excited to a single photon Fock state at event P. At P the total state held by Alice and Rob is then the entangled state

$$|0\rangle_M \to |1\rangle_{A_1}|0\rangle_{A_2}|1\rangle_{R_1}|0\rangle_{R_2} + |0\rangle_{A_1}|1\rangle_{A_2}|0\rangle_{R_1}|1\rangle_{R_2} \tag{21}$$

where $|1\rangle_{A_i}, |1\rangle_{R_i}$ are single photon excitations of the Minkowski vacuum states in each of the cavities. Treating these states as single particle excitations of the *Minkowski* vacuum is an approximation. We expect this to be valid so long as the cavities do not move appreciably over the time taken for the source to excite the modes. As this time cannot be smaller than the round trip time in the cavity, we are implicitly assuming the cavities are very small. The state in Eq.(21) encodes the

two qubit entangled Bell state

$$|\boldsymbol{\beta}_{00}\rangle_M \equiv \frac{1}{\sqrt{2}}\left(\,|\mathbf{0}\rangle_M|\mathbf{0}\rangle_M + |\mathbf{1}\rangle_M|\mathbf{1}\rangle_M\,\right) \tag{22}$$

where the first qubit in each term refers to cavity A, the second qubit refers to cavity R and the logical states $|\mathbf{0}\rangle_M, |\mathbf{1}\rangle_M$ are defined in terms of the physical Fock states for A's cavity by the *dual rail* basis states

$$|\mathbf{0}\rangle_M = |1\rangle_{A_1}|0\rangle_{A_2}, \quad |\mathbf{1}\rangle_M = |0\rangle_{A_1}|1\rangle_{A_2}, \tag{23}$$

with similar expressions for R's cavity.

The previous construction implicitly assumes that we have chosen a modal decomposition of the Minkowski vacuum based on intra-cavity and extra-cavity modes. This is a legitimate alternative to the usual way of quantizing the vacuum in terms of plane wave modes[16]. Note that once the cavities are loaded with a photon, we assume the cavity is perfect and cannot emit the photon. The quasi modes of reference [16] then become genuine orthogoal modes.

In order to set up a teleportation protocol[8] we now suppose that Alice has an additional cavity, which we will call the client cavity (C), again containing a single qubit with dual rail encoding by a single photon excitation of a two mode Minkowski vacuum state. This qubit is in an unknown state

$$|\boldsymbol{\psi}\rangle_M = \alpha|\mathbf{0}\rangle_M + \beta|\mathbf{1}\rangle_M \tag{24}$$

As Rob's cavity accelerates away, the client cavity is brought near to A's cavity so that a joint measurement can be made on the two orthogonal modes of each cavity. The joint measurement should correspond to an effective measurement of the two qubit system in the Bell basis for A and C.

The results of this measurement are then sent to Rob, and can be received by him as long as Alice transmits them before she moves across Rob's horizon (see Fig.(1b)). Rob now uses these measurements to make transformations, and possibly measurements, to verify the protocol in his local *accelerating* frame. However we now must confront the possibility that as Rob is accelerating his cavity will become populated by thermally excited photons through the Davies-Unruh mechanism [10] for accelerated cavities. As we will show, this reduces the fidelity of a teleportation protocol between accelerated partners.

A. Fidelity of teleported state

Let us first begin by briefly recalling the usual teleportation protocol, between Minkowski observers Alice and Bob [Fig.(1a)], as given in [8]. Our two qubit entangled state will be encoded as entangled Fock states of the electromagnetic field. Alice wishes to teleport the state $|\boldsymbol{\psi}\rangle_M = \alpha|\mathbf{0}\rangle_M + \beta|\mathbf{1}\rangle_M$ to Bob. Let Alice and Bob share the entangled Bell state $|\boldsymbol{\beta}_{00}\rangle_M = 1/\sqrt{2}(\,|\mathbf{0}\rangle_M\otimes|\mathbf{0}\rangle_M+|\mathbf{1}\rangle_M\otimes|\mathbf{1}\rangle_M\,)$. The input state to the system is then $|\boldsymbol{\Psi}_0\rangle_M = |\boldsymbol{\psi}\rangle_M\,|\boldsymbol{\beta}_{00}\rangle_M$. Alice performs a CNOT gate on $|\boldsymbol{\psi}\rangle_M$ and her portion of $|\boldsymbol{\beta}_{00}\rangle_M$, and then passes the first qubit of the output state through a Hadammard gate. Upon making a joint projective measurement on her two logical qubits with the result $|\boldsymbol{i}\rangle_M \otimes |\boldsymbol{j}\rangle_M$ with $i,j\in\{0,1\}$, the full state is projected into $|\boldsymbol{i}\rangle_M \otimes |\boldsymbol{j}\rangle_M \otimes |\boldsymbol{\phi}_{i,j}\rangle_M$ where Bob's state is given by $|\boldsymbol{\phi}_{ij}\rangle_M \equiv x_{ij}|\mathbf{0}\rangle_M + y_{ij}|\mathbf{1}\rangle_M$. Here we have defined the four possible conditional state amplitudes as $(x_{00},y_{00}) = (\alpha,\beta)$, $(x_{01},y_{01}) = (\beta,\alpha)$, $(x_{10},y_{10}) = (\alpha,-\beta)$, and $(x_{11},y_{11}) = (-\beta,\alpha)$. After receiving the classical information $\{i,j\}$ of the result of Alice's measurement, Bob can rotate his qubit of the entangled state into $|\boldsymbol{\psi}\rangle_M$ by applying the operations $Z_M^i\,X_M^j$ to $|\boldsymbol{\phi}_{ij}\rangle_M$, where Z and X are single qubit rotations on the logical states. The fidelity of the teleported state is unity in this idealized situation.

Alice now wishes to perform this same teleportation protocol with the uniformly accelerated Rob. When Alice sends the result of her measurement $\{i,j\}$, which can be received by Rob, if Alice has not yet crossed Rob's future horizon $\mathcal{H}_+$, Rob's state will be projected into (written in the Fock basis)

$$\begin{aligned}
\rho_{ij}^{(I)} &\equiv \sum_{k=0}^{\infty}\sum_{l=0}^{\infty} {}_{II}\langle k,l|\boldsymbol{\phi}_{ij}\rangle_M\langle\boldsymbol{\phi}_{ij}|k,l\rangle_{II} \\
&= \frac{1}{\cosh^6 r}\sum_{n=0}^{\infty}\sum_{m=0}^{n}\Big[(\tanh^2 r)^{n-1}\left[(n-m)|x_{ij}|^2 + m|y_{ij}|^2\right] \\
&\qquad\qquad \times |m,n-m\rangle_I\langle m,n-m| \\
&+ \Big(x_{ij}\,y_{ij}^*\tanh^{2n} r\,\sqrt{(m+1)(n-m+1)} \\
&\qquad\qquad \times |m,n-m+1\rangle_I\langle m+1,n-m| + \text{h.c.}\Big)\Big].
\end{aligned} \tag{25}$$

In Eq.(25) $|m,n-m\rangle_I = |m\rangle_{R_1}\otimes|n-m\rangle_{R_2}$ is a state of n total excitations in the region I product state, with $0\le m\le n$ excitations in the leftmost mode.

To obtain $\rho_{ij}^{(I)}$ Rob has expanded the Minkowski Fock states $\{|0\rangle_M,\,|1\rangle_M\}$ appear in the dual rail state $|\boldsymbol{\phi}_{ij}\rangle_M$ in terms region I and II Fock states using Eq.(19) and

$$|1\rangle_M = \frac{1}{\cosh^2 r}\sum_{n=0}^{\infty}\tanh^n r\,\sqrt{n+1}\,|n+1\rangle_I\otimes|n\rangle_{II}, \tag{26}$$

which results from a simple calculation utilizing Eq.(20) for $|1\rangle_M = a_M^\dagger|0\rangle_M$. Since Rob is causally disconnected from region II, the state he observes must be adapted to the RRW by tracing out over region II. The state observed by Rob Eq.(25), can be written as

$$\begin{aligned}
\rho_{ij}^{(I)} &= \sum_{n=0}^{\infty} p_n\,\rho_{ij,n}^{(I)} \qquad \text{in particular with} \\
\rho_{ij,1}^{(I)} &= |\boldsymbol{\phi}_{ij}\rangle_I\langle\boldsymbol{\phi}_{ij}|, \qquad p_0 = 0,\ p_1 = 1/\cosh^6 r.
\end{aligned} \tag{27}$$

The block tridiagonal form of $\rho_{ij}^{(I)}$ is illustrated in Fig.(3).

$$
\begin{array}{c}
 \\ {}_I\langle 00| \\ {}_I\langle 01| \\ {}_I\langle 10| \\ {}_I\langle 02| \\ {}_I\langle 11| \\ {}_I\langle 20|
\end{array}
\begin{array}{c}
\begin{array}{cccccc} |00\rangle_I & |01\rangle_I & |10\rangle_I & |02\rangle_I & |11\rangle_I & |20\rangle_I \end{array} \\
\begin{pmatrix}
0 & & & & & \\
 & |x_{ij}|^2 & x_{ij}y_{ij}^* & & & \\
 & x_{ij}^*y_{ij} & |y_{ij}|^2 & & & \\
 & & & 2|x_{ij}|^2 & \sqrt{2}\,x_{ij}y_{ij}^* & 0 \\
 & & & \sqrt{2}\,x_{ij}^*y_{ij} & 1 & \sqrt{2}\,x_{ij}y_{ij}^* \\
 & & & 0 & \sqrt{2}\,x_{ij}^*y_{ij} & 2|y_{ij}|^2
\end{pmatrix}
\end{array}
$$

FIG. 3: A schematic representation of $\rho_{ij}^{(I)}$ of Eq.(25) illustrating the $n = \{0, 1, 2\}$ excitation sectors. For the 0-excitation sector $\rho_{ij,0}^{(I)}$ has probability $p_0 \equiv 0$, since even at zero acceleration there is at least one excitation in the system from the initial entanglement creation. The 1-excitation sector spanned by $\{|01\rangle_I, |10\rangle_I\}$ has probability $p_1 = 1/\cosh^6 r$ and is given by $\rho_{ij,1}^{(I)} = |\boldsymbol{\phi}_{ij}\rangle_I\langle\boldsymbol{\phi}_{ij}|$, which is a pure state. The $n \geq 2$-excitation sectors $\rho_{ij,n}^{(I)}$ arise from the presence of Davies-Unruh radiation. They have probability $p_n = (\tanh^2 r)^{n-1}/\cosh^6 r$ and are mixed states; $n = 2$ is illustrated.

Upon receiving the result (i, j) of Alice's measurement, Rob can apply the rotation operators $Z_I^i X_I^j\Big|_{n=1}$ restricted to the 1-excitation sector of his state spanned by $\{|\mathbf{0}\rangle_I, |\mathbf{1}\rangle_I\} = \{|1\rangle_{R_1}\otimes|0\rangle_{R_2}, |0\rangle_{R_1}\otimes|1\rangle_{R_2}\}$ to turn this portion of his density matrix into the region I analogue of the state Alice attempted to teleport to him, namely

$$|\boldsymbol{\psi}\rangle_I = \alpha|\mathbf{0}\rangle_I + \beta|\mathbf{1}\rangle_I. \tag{28}$$

The fidelity of Rob's final state with $|\boldsymbol{\psi}\rangle_I$ is then

$$F^{(I)} \equiv Tr_I\Big(|\boldsymbol{\psi}\rangle_I\langle\boldsymbol{\psi}|\,\rho^{(I)}\Big) = {}_I\langle\boldsymbol{\psi}|\rho^{(I)}|\boldsymbol{\psi}\rangle_I = 1/\cosh^6 r. \tag{29}$$

At $r = 0$, corresponding to $a = 0$, we are back to the usual case of teleportation between Alice and Bob, both Minkowski observers, and the fidelity is unity. Using the definition of Ω and r in Eq.(6) we find

$$\begin{aligned} \tanh r &= \exp[-\pi\omega_R/(a/c)] \quad \text{or} \\ r &\approx \exp[-\pi\omega_R/(a/c)] \quad \text{for} \quad r \to 0. \end{aligned} \tag{30}$$

For terrestrial experiments where $a = g \sim 10\,m/s^2$, $a/c \sim 10^{-8}\,s^{-1}$ is such a small frequency, that for all frequencies ω_R of physical interest the fidelity is near unity with incredible precision, (for $r = 10^{-3}$ the fidelity is is unity to within one part in 10^6, and this still corresponds to unphysically large accelerations). Near the event horizon of a black hole appreciable accelerations can be obtained such that the reduction of the fidelity from unity could be observed. In that case an analogous teleportation scheme could be defined with the accelerated Rob stationary outside the event horizon, and Alice freely falling into the black hole.

Rob can check to see whether any Davies-Unruh photons have been excited in his local cavity using a non-absorbing detector. The probability of obtaining the answer NO is $\cosh^{-6} r$. In that case, he has restored the required entanglement, and teleportation can be completed without error. However, if Rob obtains the more likely result YES, then he cannot complete the protocol without error. In principle Rob may be able implement an error correction protocol that simply looks for more than one photon in each of his modes and makes the appropriate correction.

B. Reduction of Fidelity in terms of Entropy

It is of some interest to consider the reduction of fidelity in terms of entropy. Consider the the von Neumann entropy $S = -Tr(\rho^{(I)}\log\rho^{(I)})$ of Rob's pre-measurement state, post-measurement state upon learning the result of Alice's measurement, and the vacuum state, as a function of r. The pre-measurement state is obtained from Eq.(25) by averaging (i, j) over all four possible input states, which reduces it to a diagonal density matrix. The post-measurement state is given by Eq.(25) with the input state to the teleportation protocol chosen to be $|\boldsymbol{\psi}\rangle_M = 1/\sqrt{2}\,\big(|\mathbf{0}\rangle_M + |\mathbf{1}\rangle_M\big)$, without loss of generality.

For any acceleration $r(a)$, the 1-excitation sector of $\rho^{(I)}$ is always $\big(|\boldsymbol{\phi}_{ij}\rangle_I\langle\boldsymbol{\phi}_{ij}|\big)/\cosh^6 r$. For the particular choice of $x_{ij} = y_{ij} = 1/\sqrt{2}$ for the teleported state, the probabilities of Rob's diagonal pre-measurement state are given by $p_{n,m}^{pre} = n/2\,(1-\xi)^3\,\xi^{n-1} \equiv p_n^{pre}$, independent of m for $n \geq 0$ and $0 \leq m \leq n$, with $\xi \equiv \tanh^2 r$. The eigenvalues of the post-measurement state are given by $p_{n,m}^{post} = m\,(1-\xi)^3\,\xi^{n-1}$ for $n \geq 1$ and $0 \leq m \leq n$, with $p_{0,0}^{post} \equiv 0$. As the acceleration increases to infinity (i.e. $r \to \infty$; $\xi \to 1$), the higher n-excitation density matrices $\rho_{ij,n}^{(I)}$ of Eq.(25) make their presence known with probability proportional to $(1-\xi)^3\,\xi^{n-1}$. The relationship between eigenvalues of Rob's pre-measurement state, before he receives the result of Alice's measurement, and his post-measurement state is $p_n^{pre} = (n+1)^{-1}\sum_{m=0}^{n} p_{n,m}^{post}$ where $n+1$ is the number of states of the form $|m, n-m\rangle_I$ for fixed n, spanning $\rho_{ij,n}^{(I)}$. It is worthwhile to note that the Minkowski vacuum state Rob moves through is perceived by him as the thermal Rindler state $\rho_{|0\rangle_M}^{(I)} \equiv Tr_{II}(|0\rangle_M\langle 0|)$ with diagonal entries $p_{n,m}^{vac} = (1-\xi)^2\,\xi^n \equiv p_n^{vac}$ for $n \geq 0$ and $0 \leq m \leq n$. In a sense, each normalized n-excitation density matrix ot the pre-measurement state is individually thermalized with equal entries proportional to ξ^{n-1} as opposed to ξ^n as in $\rho_{|0\rangle_M}^{(I)}$. Within the same n-excitation subspace, the post-measurement state retains a character distinct from a thermalized state, with probabilities proportional to mx^{n-1} for each of its $n+1$ diagonalized component states.

The difference of the von Neumann entropies between $\rho_{pre}^{(I)}$ and $\rho_{post}^{(I)}$ is plotted in Fig.(4) along with a normalized 5-state model incorporating the $n = \{1, 2\}$ excitation sectors of both density matrices. Individually, the

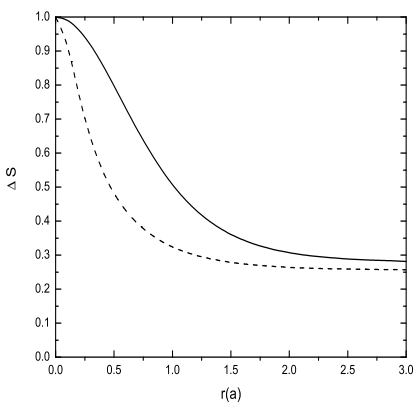

FIG. 4: Rob's entropy information gain (in bits) $\Delta S_{gain} = S_{pre} - S_{post}$ upon receiving the Alice's measurement results: numerical (solid) and $\Delta S_{gain}^{n=2}$ (dashed) for a 5-state, $n = \{1, 2\}$ excitation model using the $\{|0\,1\rangle_I, |1\,0\rangle_I\}$ and $\{|0\,2\rangle_I, |1\,1\rangle_I, |2\,0\rangle_I\}$ sector from Rob's post measurement state, with $x_{ij} = y_{ij} = 1/\sqrt{2}$. Here $|k\,l\rangle_I = |k\rangle_{R_1} \otimes |l\rangle_{R_2}$.

components of each density matrix are approaching zero due to the factors of $(1-\xi)^3\,\xi^{n-1}$. However, the observation that both the complete and approximate model show that $\Delta S \equiv S_{pre} - S_{post}$ approaches zero very slowly (note that $r = 3$ in Fig.(4) implies $\xi \sim 0.58$) indicates that $\rho_{post}^{(I)}$ retains a non-thermalized nature in each n-excitation subspace for finite r. As a whole, Rob's state $\rho_{post}^{(I)}$ is being thermalized by his acceleration through the Minkowski vacuum, which he perceives as a thermal state, and asymptotically $\lim_{r\to\infty(x\to 1)} \Delta S = 0$.

IV. TELEPORTATION WITH DIRAC PARTICLES

In this section we extend the previous results for polarizationless entangled photon states, modelled by massless modes of a bosonic scalar field, to that for entangled spin 1/2 Dirac states, which we can consider as electrons. We follow the same accelerated partner teleportation protocol as above and focus on the changes that arise from the switch from bosonic to fermionic particles. In the end, the resulting degradation in the fidelity of the teleported state and the reduction in Rob's information gain as a result of his acceleration is analogous to that for the previous case involving bosons. The specific differences arise from the crucial sign change in Fermi-Dirac versus the Bose-Einstein distribution, and the finite number of allowed excitations allowed in fermionic systems due to the Pauli exclusion principle over the unbounded excitations that can occur for the bosonic harmonic oscillator.

The study of spin fields in a uniformly accelerated frame was first carried out by Candelas and Deutsch [17]. The Dirac field in a Rindler frame was latter investigated by many authors [18, 19, 20, 21]. One important result for our purposes that came out of these studies was that the spinor for the accelerated observer can be obtained from the unaccelerated Minkowski observer by a linear transformation (composed of projection operators of the form $\boldsymbol{P}_\pm = 1/2(1 \pm \gamma^0\gamma^3)$, where γ^μ are the Minkowski 4×4 Dirac matrices satisfying $[\gamma^\mu, \gamma^\nu] = 2\,\eta^{\mu\nu}\,\mathbf{1}_{4\times 4}$ [18]) which does not mix spin components. Thus, for example, a spin up Minkowski state remains a spin up state if it undergoes uniform acceleration. In fact, for the Dirac equation in a general gravitational field, it can be shown [22] that for a constant amplitude (though momentum dependent) WKB solution of the form $\psi = a\exp(iS(x)/\hbar)$ the gravitational field does not affect the spin. In the next order of approximation, where $a \to a(x)$, one finds that the spin is parallel propagated along the path of the Dirac particle [23] (and references therein) i.e. the spin behaves in the same way as a spinning top. For gravitational theories with torsion, the spin couples to the torsion, while the orbital angular momentum does not. It is only in the next higher order of the WKB approximation that one finds a dependence of the spin on the path of the wave packet (i.e. the spin creating non-geodesic motion) [24]. There is a slight technical difference in the definition of the spin operator between the work of [18] and [19] that arises for the Dirac equation in a Rindler spactime when an external electromagnetic field is applied. In the absence of an externally applied field, as considered in this work, the different definitions reduce to an identical form. In the following, we draw upon results from the paper by Hacyan [18] and adapt them to our analysis.

In the single mode analysis that we consider in this work, the bosonic Minkowski vacuum Eq.(19) can be written as $|0\rangle_M = \mathcal{N}_b \exp(\tanh r\, b_I^\dagger\, b_{II}^\dagger)\,|0\rangle_I \otimes |0\rangle_{II}$, where $\mathcal{N}_b = 1/\cosh r$ is the bosonic normalization factor and $\tanh r = \exp(-\pi\Omega)$, with $\Omega \equiv \omega_R/(a/c)$. For the case of fermions we in essence have an complex rotation of $r \to i\,r$ which yields $|0\rangle_M = \mathcal{N}_f \exp(i\tan r\, c_I^\dagger\, c_{II}^\dagger)\,|0\rangle_I \otimes |0\rangle_{II}$, where $c_I^\dagger$, c_I and $c_{II}^\dagger$, c_{II} are fermionic creation and annihilation operators in region I and region II, $\mathcal{N}_f = \cos r$ is the fermionic normalization factor, and r is now defined through $\tan r = \exp(-\pi\Omega)$. In analogy with Eq.(6) the fermionic Bogoliubov coefficients [18, 20] allow us to define

$$\cos r = \left(1 + e^{-2\pi\Omega}\right)^{-1/2},\ \sin r = e^{-\pi\Omega}\,\left(1 + e^{-2\pi\Omega}\right)^{-1/2}, \tag{31}$$

where r is restricted to the range $0 \le r(a) \le \pi/4$ corresponding to $0 \le a \le \infty$. The resulting crucial sign change in Eq.(31) traces back to the use of anti-commutation relations for fermionic operators versus the commutation relations for bosonic operators. Absorbing factors of i into the definition of the Fock states, the single mode fermionic Minkowski vacuum can be written as (compare Eq.(19))

$$|0\rangle_M = \cos r|0\rangle_I \otimes |0\rangle_{II} + \sin r|1\rangle_I \otimes |1\rangle_{II}, \tag{32}$$

in accordance with the Pauli exclusion principle which

limits the number of fermionic excitations in any Fock state to $\{0,1\}$. The single mode fermionic vacuum perceived by Rob is given by

$$\rho^{(I)}_{|0\rangle_M} \equiv Tr_{II}(|0\rangle_M\langle 0|) = \cos^2 r\,|0\rangle_I\langle 0| + \sin^2 r\,|1\rangle_I\langle 1|. \tag{33}$$

In this single mode approximation, a Minkowski creation operator can be written as (compare Eq.(20))

$$a^\dagger_M = \cos r\, c^\dagger_I + \sin r\, c_{II}. \tag{34}$$

Using Eq.(34) it is simple to show that the 1-excitation Minkowski Fock state is given by

$$|1\rangle_M = a^\dagger_M\,|0\rangle_M = |1\rangle_I \otimes |0\rangle_{II}, \tag{35}$$

and that $(a^\dagger_M)^2\,|0\rangle_M \equiv 0$, preserving the Pauli exclusion principle.

We are now in a position to repeat the accelerated partner teleportation protocol of the previous section. We interpret dual rail basis states $\{|\mathbf{0}\rangle_M\,|\mathbf{1}\rangle_M\}$ appearing in the Bell state Eq.(22) as an excitation of a spin up state in one of two possible spatial modes in Alice's cavity (and similarly for Rob) as in Eq.(23). The calculation proceeds straight forwardly as before, with even simpler algebra. When Alice makes the joint measurement on her two states with result $\{i,j\}$, Rob state is projected into (compare Eq.(25))

$$\begin{aligned}\rho^{(I)}_{ij} &\equiv \sum_{k=0}^{1}\sum_{l=0}^{1} {}_{II}\langle k\,l|\boldsymbol{\phi}_{ij}\rangle_M\langle\boldsymbol{\phi}_{ij}|k\,l\rangle_{II} \\ &= \cos^2 r\,|\boldsymbol{\phi}_{ij}\rangle_I\langle\boldsymbol{\phi}_{ij}| + \sin^2 r\,|11\rangle_I\langle 11|. \end{aligned}\tag{36}$$

In particular, $|11\rangle_I \equiv |1\rangle_{R_1}\otimes|1\rangle_{R_2}$ is a state of two excitations, one in each of the two spatial modes of Rob's cavity. In the bosonic case, a state of two excitations would also include the basis states $|0\rangle_{R_1}\otimes|2\rangle_{R_2}$ and $|2\rangle_{R_1}\otimes|0\rangle_{R_2}$ (see Fig.(3)). However, from the Pauli exclusion principle, these and all other states of excitations $n\geq 2$ are excluded.

As in the previous section, upon receiving the result (i,j) of Alice's measurement, Rob can apply the rotation operators $Z^i_I\,X^j_I\Big|_{n=1}$ restricted to the 1-excitation sector of his state spanned by $\{|\mathbf{0}\rangle_I, |\mathbf{1}\rangle_I\} = \{|1\rangle_{R_1}\otimes|0\rangle_{R_2}, |0\rangle_{R_1}\otimes|1\rangle_{R_2}\}$ to turn this portion of his density matrix into the region I analogue of the state Alice attempted to teleport to him, namely

$$|\boldsymbol{\psi}\rangle_I = \alpha|\mathbf{0}\rangle_I + \beta|\mathbf{1}\rangle_I. \tag{37}$$

The fidelity of Rob's final state with $|\boldsymbol{\psi}\rangle_I$ is then

$$F^{(I)} \equiv Tr_I\Big(|\boldsymbol{\psi}\rangle_I\langle\boldsymbol{\psi}|\,\rho^{(I)}\Big) = {}_I\langle\boldsymbol{\psi}|\rho^{(I)}|\boldsymbol{\psi}\rangle_I = \cos^2 r. \tag{38}$$

For the bosonic case Eq.(29) the fidelity $1/\cosh^6 r$ decreases to zero as the acceleration approaches infinity. This occurs since the thermal excitations due to the Davies-Unruh radiation can run up the infinite excitation ladder accommodated by the harmonic oscillator, while the desired teleported state $|\boldsymbol{\psi}\rangle_I$ resides in the 1-excitation sector. In the fermionic case, the number of allowed excitations is bounded above by $n=2$, again with the desired teleported state residing in the 1-excitation sector. Thus as the acceleration approaches infinity, the fidelity saturates to $\lim_{r\to\pi/4}\cos^2 r = 1/2$.

From an entropy point of view, Rob's pre-measurement state is given by

$$\rho^{(I)}_{pre} = \frac{1}{2}\cos^2 r\big(|0\,1\rangle_I\langle 0\,1| + |1\,0\rangle_I\langle 1\,0|\big) + \sin^2 r|1\,1\rangle_I\langle 1\,1|, \tag{39}$$

and the post measurement state, again for the choice of $x_{ij} = y_{ij} = 1/\sqrt{2}$, is given by

$$\rho^{(I)}_{post} = \frac{1}{2}\cos^2 r\,|\boldsymbol{\psi}\rangle_I\langle\boldsymbol{\psi}| + \sin^2 r\,|11\rangle_I\langle 11|. \tag{40}$$

This latter state is easily diagonalized and it is found that the von Neumann entropies (in bits) satisfy the relation $S_{pre} = S_{post} + \cos^2 r$ and hence Rob's information gain is given by

$$\Delta S_{gain} = S_{pre} - S_{post} = \cos^2 r. \tag{41}$$

At zero acceleration, $r=0$, with Alice and Rob both Minkowski, $\Delta S_{gain} = 1$ states that Rob can completely restore the properties of the state that Alice teleports to him. At infinite acceleration, $r=\pi/4$, Rob's information gain saturates at a value $\Delta S_{gain} = 1/2$ again due to the finite number of excitations allowed by the fermionic system.

V. DISCUSSION AND CONCLUSIONS

The main issues of teleportation between an inertial Minkowksi observer Alice and a non-inertial, uniformly accelerated Rindler observer Rob are two fold. First, as a result of the acceleration, the Minkowski vacuum that Rob moves through (for a single Rindler mode $(\Omega,\vec{k}_\perp)$) can be written as a two-mode squeezed state with the component Fock states existing in causally disconnected regions I and II. Second, as a result of this fact, Rob perceives the Minkowski vacuum as a pure thermal state of temperature T_U as the inevitable result of his complete ignorance of region II. In an attempt to teleport a state $|\boldsymbol{\psi}\rangle_M = \alpha|\mathbf{0}\rangle_M + \beta|\mathbf{1}\rangle_M$ to Rob, the best we can expect this uniformly accelerated observer to recover at the end of the protocol is $|\boldsymbol{\psi}\rangle_I = \alpha|\mathbf{0}\rangle_I + \beta|\mathbf{1}\rangle_I$. We have shown that the fidelity of Rob's post-measurement state with this best possible result $|\boldsymbol{\psi}\rangle_I$ is $\cosh^{-6} r$. In addition, we have demonstrated that the information gain obtained by Rob (defined as the difference in the von Neumann entropies of his pre- and post-measurement states), decreases with increasing acceleration through the Minkowski vacuum, which Rob perceives as a Rindler thermal state. At high acceleration (high Davies-Unruh

temperatures) all information is lost and Rob perceives only the thermalized vacuum state.

Recently, Anderson *et al* [25] have also discussed teleportation and the Unruh vacuum. However, that work considers a situation that is physically quite different than the one presented here. The authors use the *mirror modes* of Audretsch and Müller [26] and consequently have the accelerated observers travelling on oppositely directed hyperbolas, with Alice in region I and Bob in the causally disconnected region II. The teleportation protocol is then interpreted from the point of view of a Minkowski observer Mork. In this work, we consider a setup between observers, one stationary, the other accelerated, who remain causally connected to each other during the teleportation protocol. Kok and Yurtsever [27] have recently considered the interaction of a uniformly accelerated qubit with a massless scalar field (in a similar fashion to the classic "particle detector" calculation of Unruh and Wald [28]) and show that the qubit decoheres. For long interaction times and slow enough accelerations the decoherence can be made arbitrarily small. In general, a more realistic, though much more difficult analysis would take into account any decoherence effects arising from Rob's motion from zero to some finite constant acceleration. B.L. Hu *et al* [29] have also considered the motion of an arbitrary number of detectors modelled as oscillators and minimally coupled to a massless scalar field in $1+1$ dimensions. In this approach, the scalar field is integrated out, leaving a reduced set of effective semiclassical equations which nonetheless contain the full quantum dynamics of the field. For an accelerated detector and probe the main contributions arise from field correlations across the horizon.

The model investigated here is analogous to teleportation through two channels, one of which is free space for Alice and the second which involves parametric down conversion with the following caveat described below. In the second channel, a signal mode I and an idler mode II experience a squeezing Bogoliubov transformation analogous to Eq.(17) [30] (see appendix A). Here r is proportional to the coupling strength between the signal and idler mode times the length of the crystal through which the parametric down conversion takes place; higher interaction strengths and/or longer interaction lengths corresponds to a higher Davies-Unruh temperature. The caveat is that Rob, acting as say the signal mode, has no access to information about the idler and therefore must trace out this information. Performing the teleportation protocol in such a system is analogous to teleportation between a Minkowski and Rindler observer as considered in this work. In the parametric down conversion model, Rob can choose to ignore the idler information thus mimicking a Rindler observer. However, for an accelerated observer, the existence of the horizons $\mathcal{H}_\pm$ is of fundamental importance. Since region I and II are causally disconnected, there is no way, even in principle, for Rob to have any information about region II, and thus his state is always a reduced density matrix appropriate for region I.

The work presented here also has implications for teleportation in curved spacetimes. Recently, the equivalence of Hawking and Davies-Unruh temperatures has been established by embedding curved spacetimes in flat spaces of sufficiently high dimension, and then computing the Davies-Unruh temperatures of uniformly accelerated observers in the latter [31]. For a scalar field near a horizon, the wave equation takes a universal free field form, and the mode decomposition is essentially the same as in the Rindler case. The analysis for curved spacetimes would proceed in an analogous fashion as the one presented here, but in the higher dimensional flat space, and teleportation would again be degraded by the observer's acceleration. Details will be expanded upon in future work.

We have given an explanation of the reduction of teleportation fidelity in terms of the Davies-Unruh radiation seen by Rob in his frame. Note that this is an operationally meaningful statement as Rob can attempt to verify that he has received the desired state $\left(x_{lm}|\mathbf{0}\rangle_I + y_{lm}|\mathbf{1}\rangle_I\right)$ by local verification measurements (e.g. a single photon interference experiment in the bosonic case), and then send the results to Alice. From an operational point of view Alice would conclude that the shared entangled resource has become decohered. It is well know that entanglement is a fragile resource in the presence of environmental decoherence. It appears also to be a fragile resource when one of the entangled parties undergoes acceleration. While the degree of decoherence is exceedingly small for practical accelerations, the apparent connection between space time geometry and quantum entanglement is intriguing.

APPENDIX A: ORIGIN OF THE TWO-MODE SQUEEZED STATE MINKOWSKI VACUUM AND THE THERMAL RINDLER VACUUM

The origin of the bosonic two-mode squeezed state vacuum given in Eq.(4) and Eq.(19) and the subsequent thermal Rindler vacuum given by Eq.(10) is a simple consequence of the commutation relations of the Minkowski and Rindler creation and annihilation operators Eq.(20). Following Yurke [30] let us consider the analogous process of parametric down conversion between a signal and idler mode with annihilation operators a_S and a_I respectively. Here we treat the pump as non-depleted. For a vacuum state input (analogous to the Minkowski vacuum $|0\rangle_M$), the operators b_S, b_I given at the output of the squeezing crystal have the general form

$$\begin{aligned} b_S &= S_{11}a_S + S_{12}a_I^\dagger \\ b_I^\dagger &= S_{21}a_S + S_{22}a_I^\dagger. \end{aligned} \tag{A1}$$

The commutation relations $[b_S, b_S^\dagger] = 1$, $[b_I, b_I^\dagger] = 1$ and $[b_S, b_I] = 0$ result in the constraints

$$|S_{11}|^2 - |S_{12}|^2 = 1$$

$$
\begin{aligned}
|S_{22}|^2 - |S_{21}|^2 &= 1 \\
S_{11}S_{21}^* &= S_{12}S_{22}^*.
\end{aligned} \tag{A2}
$$

These relationships can be inverted to write the input operators a in terms of the output operators b as

$$
\begin{aligned}
a_S &= S_{11}^* b_S - S_{21}^* b_I^\dagger \\
a_I^\dagger &= -S_{12}^* b_S + S_{22}^* b_I^\dagger.
\end{aligned} \tag{A3}
$$

The hyperbolic relations in Eq.(A2) allow us to write

$$
\begin{aligned}
S_{11} = \cosh r, \qquad & S_{12} = e^{i\phi}\sinh r \\
S_{21} = e^{i\phi}\sinh r, \qquad & S_{22} = \cosh r,
\end{aligned} \tag{A4}
$$

as used in Eq.(20) (with the unimportant phase $e^{i\phi}$ absorbed into the definition of the operators). For the case of parametric down conversion, r is proportional to the interaction strength times the length of the crystal. The above relationships also imply

$$
b_S^\dagger b_S - b_I^\dagger b_I = a_S^\dagger a_S - a_I^\dagger a_I. \tag{A5}
$$

Thus, the difference in the number of signal and idler photons leaving the squeezing crystal is the same as the initial signal and idler difference at input. In particular, if the input is the vacuum, Eq.(A5) requires that the photons must exit the crystal in pairs, each signal photon matched with a corresponding idler photon.

The signal and idler output vacuum states $|0\rangle_S$ and $|0\rangle_I$ defined such that $b_S|0\rangle_S = 0$ and $b_I|0\rangle_I = 0$ (analogous to the Rinder vacuums in region I and II) are different than the vacuum $|0\rangle_a$ (analogous to the Minkowski vacuum $|0\rangle_M$) annihilated by the input operators a_S and a_I. Since the signal and idler photons are created in pairs the form of the two-mode squeezed vacuum $|0\rangle_a$ can be taken to be

$$
|0\rangle_a = \sum_{n=0}^{\infty} A_n |n\rangle_S \otimes |n\rangle_I. \tag{A6}
$$

From the requirement that $a_S|0\rangle_a = 0 = a_I|0\rangle_a$, and using Eq.(A3) we have the equation $(S_{11}^* b_S - S_{21}^* b_I^\dagger)|0\rangle_a = 0$ with solution $A_{n+1} = (S_{21}^*/S_{11}^*)\, A_n$ or $A_n = (S_{21}^*/S_{11}^*)^n A_0$. Normalization of the vacuum state ${}_a\langle 0|0\rangle_a = 1$ produces $|A_0|^2 = |S_{11}|^{-2}$ and yields the state

$$
\begin{aligned}
|0\rangle_a &= \frac{1}{|S_{11}|}\sum_{n=0}^{\infty}\left(\frac{S_{21}^*}{S_{11}^*}\right)^n |n\rangle_S \otimes |n\rangle_I \\
&= \frac{1}{\cosh r}\sum_{n=0}^{\infty}\tanh^n r\, |n\rangle_S \otimes |n\rangle_I,
\end{aligned} \tag{A7}
$$

where in the last step, Eq.(A4) was used. Equation(A7) is just Eq.(19).

If one of the output modes is unobserved, the state describing the observed mode is a thermal vacuum state. This follows from the arguments in Section II where for, say, an un-observed signal mode, we take the observed idler state as

$$
\rho^{(I)}_{|0\rangle_a} \equiv Tr_S(|0\rangle_a\langle 0|) = \left(1 - e^{-2\pi\Omega}\right)\sum_{n=0}^{\infty} e^{-2\pi\Omega n}|n\rangle_I\langle n|. \tag{A8}
$$

In Eq.(A8) we have made the identifications as in Eq.(6)

$$
\begin{aligned}
\cosh r &= \left(1 - e^{-2\pi\Omega}\right)^{-1/2}, \\
\sinh r &= e^{-\pi\Omega}\left(1 - e^{-2\pi\Omega}\right)^{-1/2}, \quad \Omega \equiv \frac{\omega_I}{a/c},
\end{aligned} \tag{A9}
$$

where ω_I is the frequency of an idler photon. In general the Davies-Unruh temperature T_U is given by

$$
T_U = \frac{\hbar\omega_I}{2\pi k_B \ln(|S_{11}|/|S_{21}|)} \tag{A10}
$$

which reduces to Eq.(11) in the case of an accelerated Rindler observer with $a \to \omega_I c/\ln(|S_{11}|/|S_{21}|)$.

ACKNOWLEDGMENTS

The authors wish to thank Jonathan P. Dowling, Ulvi Yurtsever and the members of the JPL Quantum Computing Technologies Group for stimulating discussions on this and other topics in relativistic quantum information theory. GJM acknowledges useful discussions with Paul Davies.

[1] R. Landauer, Physics Today, 44:23-29, May (1991).
[2] C.H. Bennett, G. Brassard, C. Crépeau, R. Jozsa, A. Peres, W.K. Wooters, Phys. Rev. Letts. **70**, 1895 (1993).
[3] A. Peres,P.F. Scudo and D.R. Terno, Phys. Rev. Lett., **88**, 230402 (2002); A. Peres and D.R. Terno quant-pn/0208128 (2002).
[4] P.M. Alsing and G.J. Milburn, Quantum Inf. Comput. **2**, 487 (2002).
[5] R.M.Gingrich and C. Adami, Phys. Rev. Lett. **89**, 270042 (2002).
[6] R.M. Gingrich, A. J. Bergou and C. Adami quant-ph/0302095 (2003).
[7] P. M. Alsing and G.J Milburn, Phys. Rev. Lett. **91**, 180404 (2003).
[8] M.A. Nielsen and I. Chuang, *Quantum Computation and Quantum Information*, Cambridge Univ. Press, p25-28, (2000).
[9] S.A. Fulling, Phys. Rev. D**7**, 2850 (1973).
[10] P.C.W. Davies, J. of Phys. A**8**, 609 (1975); W.G. Unruh, Phys. Rev. D**14**, 870 (1976);
[11] N.D. Birell and P.C.W Davies, *Quantum fields in curved space*, Cambridge Univ. Press (1982).

[12] S. Takagi, Progress of Theoretical Physics Supplement No. **88**, 1-142 (1986).

[13] G. 'T Hooft, Acta Physica Polonica B**19**, 187 (1988).

[14] L.N. Pringle, Phys. Rev D**39**, 2178 (1989).

[15] D.F. Walls and G.J. Milburn, *Quantum Optics*, Springer-Verlag, New York (1994).

[16] B.J. Dalton, and P.L. Knight, J. Mod. Opt. **46**, 1817, ibid 1839 (1999).

[17] P. Candelas and D. Deutsch, Proc. R. Soc. Lond. A **354**, 79 (1997); **362**, 251 (1978).

[18] R. Jáureguei, M. Torres and S. Hacyan, Phys. Rev. D **43**, 3979 (1991).

[19] E. Bautista, Phys. Rev. D **48**, 783 (1993).

[20] W. Greiner, B. Müller and J. Rafelski, *Quantum Electrodynamics of Strong Fields*, Springer-Verlag, New York, Chapter 21 (1985); M. Soffel, B. Müller and W. Greiner, Phys. Rev. D **22**, 1935 (1980).

[21] D.A.T. Vanzella and G. E.A. Matsas, Phys. Rev. Lett. **87**, 151301 (2001).

[22] P.M. Alsing, J.C. Evans and K.K. Nandi, Gen. Rel. and Grav. **33**, 1459-1487 (2001); gr-qc/0010065.

[23] C. Lämmerzahl and G. Neugebauer, in *Gyros, Clocks, Interferometers. . . : Testing Relativistic Graivty in Space*, Eds. C. Lämmerzahl, C.W. Everitt and F.W. Hehl, Springer, N.Y., p31-51, (2001).

[24] J. Audretsch, J. Phys. A: Math. Gen. **14**, 411 (1981).

[25] X. Anderson, S.J. van Enk and T. Rudolph, quant-ph/0302091.

[26] J. Audretsch and R. Müller, Phys. Rev. D **49**, 4056 (1994).

[27] P. Kok and U. Yurtsever, gr-qc/0306084.

[28] W.G. Unruh and R.M. Wald, Phys. Rev. D **29**, 1047 (1984).

[29] A. Rava, B.L. Hu and J. Anglin, Phys. Rev. D **53**, 7003 (1996).

[30] B. Yurke, *Squeezed Light*, unpublished lectures notes, Institute of Optics, University of Rochester, Rochester, NY, (1989).

[31] S. Desser and O. Levin, Class. Quan. Grav.**15**, L85 (1998); Phys. Rev D**59**, 064004 (1999); T. Padmanabhan, Mod. Phys. Lett. A**17**, 923 (2002).